MISSOURI UNIFORM CRASH REPORT

CR

1 - GENERAL CRASH INFORMATION

SPACE USED FOR BARCODE

AGENCY NAME AND ORI: **NEOSHO POLICE DEPARTMENT - MO0730300**

LEFT THE SCENE	DRIVER NO.	CLEARED	CRASH CLASSIFICATION	PROPERTY DAMAGE ONLY	NO. INJURED	NO. KILLED	REPORT / CASE / INCIDENT NUMBER
☐ Yes ☒ No		☐ Yes ☐ No		☒	0	0	0615-186

NO. VEH. INV.	CRASH DATE	CRASH TIME (MIL.)	NOTIFIED DATE	TIME NOTIFIED (MIL.)	INVESTIGATION DATE	TIME ARRIVED (MIL.)	INVEST. AT SCENE
1	06-23-2015	1435	06-23-2015	1439	06-23-2015	1445	☒ Yes ☐ No

CRASH TYPE

ROADWAY: ☐ On Roadway ☒ Off Roadway

NON-COLLISION: ☐ Overturning ☐ Fire / Explosion ☐ Immersion ☐ Jackknife ☐ Fell/Jumped From MV ☐ Cargo / Equip Loss / Shift ☐ Other Non-Collision

COLLISION INVOLVING: ☐ Animal ☐ Pedalcycle ☒ Fixed Object ☐ Other Object ☐ Pedestrian ☐ Railway Vehicle ☐ Animal Drawn Veh / Animal Ridden Trans. ☐ Motor Vehicle in Transport → ☐ Parked Motor Vehicle → ☐ Working Motor Vehicle →

DIRECTIONAL ANALYSIS FOR IMPACT WITH MOTOR VEHICLE: ☐ Front to Front ☐ Front to Rear ☐ Rear to Rear ☐ Rear to Side ☐ Angle ☐ Sideswipe (Same Dir.) ☐ Sideswipe (Opp. Dir.) ☐ Falling / Shifting Cargo (Set in motion by MV) ☒ Other (Explain) ☐ Unknown (Explain)

COMMERCIAL MOTOR VEHICLE INVOLVEMENT CRITERIA - Answer the following to determine if the "Commercial Vehicle" fields in Section 7G must be completed.

1. Does this crash involve any of the following?
   1a. A person fatally injured; OR
   1b. A person transported for medical attention; OR
   1c. A vehicle towed due to disabling damage.

   ☒ No - No commercial vehicle fields need completion.
   ☐ Yes - Go to number 2. →

2. Examine each vehicle to determine if it is a commercial vehicle based upon the following:
   2a. A truck / cargo van with GVWR / GCVWR of more than 10,000 lbs; OR
   2b. A motor vehicle with seating for 9 or more including driver; OR
   2c. A vehicle with a hazardous materials placard.

   ☐ No - No commercial vehicle fields need completion.
   ☐ Yes - Complete Section 7G for appropriate vehicle.

EVIDENTIARY PHOTOS TAKEN	BY WHOM	AVAILABLE FROM
☒ Yes ☐ No	CLIFFMAN	☐ Investigating Agency NEOSHO POLICE DEPT.
RECONSTRUCTION ☐ Yes ☒ No	BY WHOM	AVAILABLE FROM ☐ Investigating Agency

2 - LOCATION

COUNTY	MUNICIPALITY	BEAT / ZONE	TRP/DIST/PCT	GPS COORDINATES (DD MM SS.S FORMAT)
NEWTON	NEOSHO	N	NA	LAT: N LONG: W NA

ON	RDWY. DIR.	DISTANCE FROM	LOCATION	INTERSECTING	SPEED LIMIT	INT. DIR.	GEO - CODE
CST W BAXTER ST	W	250 Feet ☐ NA ___.___ Miles	☐ After ☐ NA ☒ Before ☐ At	E of CST HICKORY AV	25	W	NA

SPEED LIMIT: 25 — ROAD MAINTAINED BY: ☐ Unknown ☐ State ☐ County ☒ Municipal ☐ Private Property ☐ Other

TRAFFICWAY: ☐ One-Way ☒ Two-Way; Not Divided ☐ Two-Way; Divided; Unprotected Median ☐ Other ☐ Two-Way; Not Divided; Continuous Center Turn Lane ☐ Two-Way; Divided; Positive Median Barrier ☐ Unknown

ROAD ALIGNMENT: ☒ Straight ☐ Curve ☐ Unknown (Explain)

ROAD PROFILE: ☒ Level ☐ Downhill ☐ Dip ☐ Uphill ☐ Hillcrest ☐ Unknown (Explain)

INTERSECTION TYPE: ☒ NA ☐ 4-way Intersection ☐ Y-Intersection ☐ 5-way / More ☐ Unknown (Explain) ☐ T-Intersection ☐ Roundabout ☐ Other (Explain)

ROAD CONDITION: ☒ Dry ☐ Snow ☐ Slush ☐ Standing Water ☐ Sand / Gravel ☐ Unknown (Explain) ☐ Wet ☐ Ice / Frost ☐ Mud / Dirt ☐ Moving Water ☐ Other (Explain)

ROAD SURFACE: ☐ Concrete ☐ Brick ☐ Dirt / Sand ☐ Cobblestone ☒ Asphalt ☐ Gravel ☐ Multi-Surface ☐ Unknown (Explain)

WEATHER CONDITION: ☒ Clear ☐ Rain ☐ Sleet / Hail ☐ Fog / Mist ☐ Other (Explain) ☐ Cloudy ☐ Snow ☐ Freezing (Temp) ☐ Severe Crosswind ☐ Unknown (Explain)

LIGHT CONDITION: ☒ Daylight ☐ Dark-Lighted ☐ Dark-Unlighted ☐ Dark-Unknown Lighting ☐ Other (Explain) ☐ Unknown (Explain)

3 - DAMAGE TO PROPERTY OTHER THAN VEHICLES ☐ None

LIST OWNER'S NAME & ADDRESS, DESCRIPTION OF PROPERTY, AND DAMAGE. ☐ MoDOT ☐ County ☒ Municipality

OWNER: CITY OF NEOSHO - 203 E MAIN ST NEOSHO, MO - (417) 451-8050

PROPERTY: SIGN - VEHICLE RAN OFF ROADWAY STRICKING THE SPEED ZONE SIGN - Estimated Damages: $100.00

4 - WITNESS ☒ None Identified ☐ Additional Witnesses In Narrative

NAME	ADDRESS (Street, City, State, Zip)	PHONE NUMBER

5 - PEDESTRIAN ☒ NA ☐ Law Enforcement Officer ☐ Other Emergency Services Personnel ☐ MoDOT Worker ☐ Other Trafficway Worker ☐ Other Pedestrian

NO.	NAME (Last, First, MI) & ADDRESS (Street, City, State, Zip)	PHONE NUMBER

DATE OF BIRTH	SEX	STRUCK BY VEH #:	INJ	TRANS-PORT	SAFETY DEVICES	LOCATION
						☐ On Roadway ☐ In Driveway Access ☐ On Median / Crossing Island ☐ On Sidewalk ☐ Off Roadway ☐ Unknown

CROSSING ROAD: ☒ NA ☐ With Signal ☐ Against Signal ☐ No Signal ☐ Unknown ☐ Not At Crosswalk ☐ In Marked Crosswalk ☐ In Unmarked Crosswalk ☐ Unknown

OTHER ACTIONS: ☒ NA / None ☐ Getting On / Off Vehicle ☐ Standing / Lying / Sitting In Trafficway ☐ Pushing / Working On Vehicle ☐ Behind / In Front of Parked / Stopped Veh. ☐ Working In Trafficway ☐ Playing In Trafficway ☐ Walking / Running In Trafficway ☐ With Traffic ☐ Against Traffic ☐ Unknown ☐ Other (Explain)

SCHOOL INFO. ☒ NA ☐ Going To / From School ☐ Getting On / Off School Bus ☐ Both Of The Above ☐ Unknown (Explain)

PROBABLE CONTRIBUTING CIRCUMSTANCES ☐ None ☐ Failed To Yield ☐ Distracted / Inattentive ☐ Alcohol ☐ Drugs ☐ Vision Obstructed (Explain) ☐ Physical Impairment (Explain) ☐ Other (Explain) ☐ Unknown (Explain)

DISTRACTED / INATTENTIVE CODE(S) ☒ NA

ALCOHOL USE ☐ Yes ☐ No ☐ Unknown

6. COLLISION DIAGRAM	Compass Direction Before Crash Event(s) (Circle One)	V1 N E S (W) U	V2 N E S W U	V3 N E S W U	V4 N E S W U	V5 N E S W U	V6 N E S W U

INDICATE NORTH

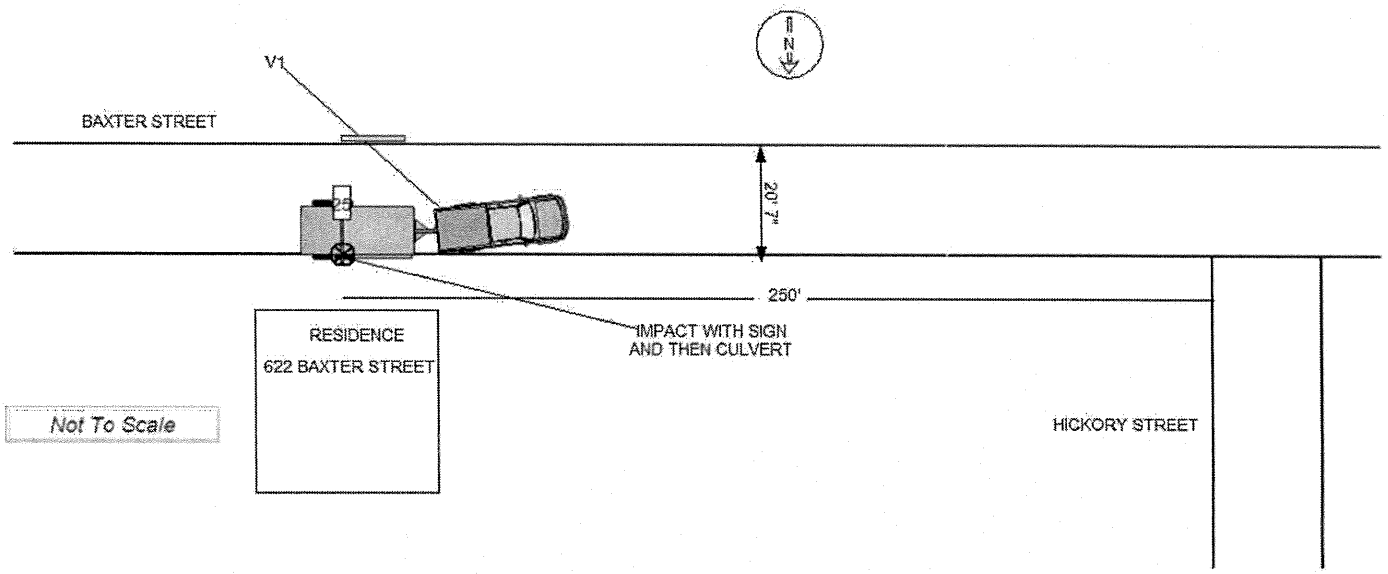

Not To Scale

INDICATE ROAD NAMES

DIAGRAM NOT TO SCALE

7 - DRIVERS, VEHICLES, OWNERS, & OCCUPANTS

NO. 1 — **7A. DRIVER** - NAME (Last, First, MI) & ADDRESS (Street, City, State, Zip): VANDORN, AUSTIN GLENN 1419 SPLITLOG RD - GOODMAN, MO 64843 — PHONE NUMBER: (417) 214-7578

DRIVER LICENSE / ID NUMBER: Z202121011 — STATE: MO

LIC STATUS: [X] Valid [ ] Susp / Rev / Denied [ ] Canceled / Oth Invalid [ ] Expired [ ] Disqual CDL [ ] Unknown [ ] NA

LIC TYPE: [ ] Operator Class ____ [ ] CDL Class ____ [X] Interm / Grad [ ] Permit [ ] MC Only [ ] Unlicensed [ ] Unknown (Explain) [ ] NA

MC ENDORSEMENT: [ ] Yes [ ] No [X] NA [ ] Unknown (Explain)

DATE OF BIRTH	SEX	SEAT LOC	INJ	TRANS-PORT	EJEC-TION	AIR BAG	SAFETY DEVICES
03-04-1998	M	FL	5	1	2	01	05

VISION OBSTRUCTED: [X] Not Obstructed [ ] Windshield [ ] Load on Veh [ ] Trees / Brush [ ] Building [ ] Embankment [ ] Sign [ ] Hillcrest [ ] Parked Veh [ ] Moving Veh [ ] Stopped Veh [ ] Glare [ ] Other (Explain) [ ] Unknown (Explain) [ ] NA

PROOF OF INSURANCE: [X] Yes [ ] No [ ] Not Required — INSURANCE COMPANY: EMC INSURANCE [ ] Expired — PHONE NO. (Optional): (417) 781-5040 - — POLICY NUMBER: 5X1177716 [ ] NA — [ ] Driver [X] Vehicle

7B. VEHICLE - OWNER NAME (Last, First, MI) & ADDRESS (Street, City, State, Zip): ANDREWS, MELISSA SUE 18122 OHANNAH LN - NEOSHO, MO 64850 [ ] SAD — PHONE NUMBER: (417) 451-0077 [ ] SAD

YEAR	MAKE	MODEL	COLOR	VEH. TYPE	TOTAL NO. OF OCC.
2008	Chevrolet	1500	RED	1	1

LICENSE - PLATE NO: 5HU954 — STATE: MO — YEAR: 2016 — VIN: 1GCEK14C28Z321975 — TOWED FROM SCENE: [ ] Yes [X] No — TOWED DUE TO DIS. DAMAGE: [ ] Yes [X] No

VEHICLE DAMAGE (Mark all damaged areas) [ ] None / No Damage

INITIAL IMPACT NO: [ ] NA 21

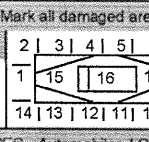

18 - Undercarriage
19 - Windshield
20 - Burned
21 - Towed Unit
22 - Cargo
23 - Unknown
24 - Other (Explain)

TOWED BY: [ ] Unknown [X] NA

VEHICLE BODY TYPES - Automobiles / Specialty Vehicles [X] Vehicle Used As Public Conveyance

[ ] Passenger Car
[ ] Van (< 9 W/Driver)
[ ] Passenger Van (9+ W/Driver)
[ ] Sport Utility Vehicle
[ ] Limousine (7-8 W/Driver)
[ ] Limousine (9-15 W/Driver)
[ ] Motorized Bicycle
[ ] Pedalcycle → [ ] To / From School
[ ] Small Bus (9-15 W/Driver)
[ ] Large Bus (16+ W/Driver) → [ ] School Bus [ ] Intercity [ ] Transit / Commuter [ ] Charter / Tour [ ] Other
[ ] Motorcycle
[ ] ATV → [ ] 2 Wh [ ] 3 Wh [ ] 4 Wh [ ] 5 Wh / More [ ] Unknown
[ ] Motor Home
[ ] Farm Implements
[ ] Construction Equip. Heavy Mach.
[ ] Other Vehicle (Code) _____
[ ] Cargo Van
[X] Pickup
[ ] Other Heavy Truck
[ ] Unknown (Explain)
[ ] Single-unit Truck; 2 axles, 6 tires
[ ] Single-unit Truck; 3 or more axles
[ ] Veh. Pulling Another Unit(s) (Does not apply to Truck Tractors)
[ ] Truck Tractor With No Units
[ ] Truck Tractor With One Unit
[ ] Truck Tractor With Two Units
[ ] Truck Tractor With Three Units

GVW / GCVW RATING (Not Licensed Weight) (Pickups, Cargo Vans, All Trucks, Truck Tractors, or Haz Mat Placard Veh. Only)
[X] Less than or equal to 10,000 lbs.
[ ] 10,001 - 26,000 lbs.
[ ] Greater than 26,000 lbs.
[ ] Unknown

EMERGENCY VEHICLE INVOLVEMENT [X] NA
[ ] Police [ ] Ambulance [ ] Fire [ ] Other (Must check "A" / "B") → [ ] A. Emergency Vehicle on Emergency Run [ ] B. Stationary With Emergency Equip. Activated

CONTRIBUTING TRAFFIC CONDITIONS [X] NA
[ ] Congestion Ahead [ ] Crash Ahead [ ] Other Incident Ahead [ ] Unknown (Explain)

7C. VEHICLE ACTION / SEQUENCE OF EVENTS CODES [ ] Additional Codes Listed in Narrative (See Codes in Section 8)

SEQUENCE OF EVENTS CODES [ ] Unknown: 01 15 20 36 36 — ANIMAL CODE(S): — FIXED OBJECT CODE(S): 27 26

ALCOHOL USE: [ ] Yes [ ] Unk [X] No [ ] NA

7D. PROBABLE CONTRIBUTING CIRCUMSTANCES [ ] None

[ ] Vehicle Defects (Explain)
[ ] Speed - Exceeded Limit
[ ] Too Fast For Conditions
[ ] Violation Signal / Sign
[ ] Failed To Yield
[ ] Alcohol
[ ] Drugs
[ ] Vision Obstructed
[ ] Driver Fatigue / Asleep
[ ] Improper Signal
[ ] Improper Backing
[ ] Improper Turn
[ ] Improper Passing
[ ] Improperly Parked
[ ] Failed To Dim Headlights
[ ] Failed To Use Lights
[ ] Following Too Close
[ ] Wrong Side (Not Passing)
[ ] Wrong Side (One-Way)
[ ] Physical Impairment (Explain)
[ ] Improper Start From Park
[ ] Improper Towing / Pushing
[ ] Improperly Stopped On Roadway
[X] Improper Lane Usage / Change
[ ] Overcorrected
[ ] Improper Riding / Clinging To Veh. Exterior
[ ] Failed To Secure Load / Improper Loading
[ ] Animal(s) In Roadway
[ ] Object / Obstruction in Roadway
[ ] Distracted / Inattentive (Designate Type)
[ ] Unknown (Explain)
[ ] Other (Explain)

DISTRACTED / INATTENTIVE CODE(S) [X] NA (See Codes in Section 8)

7E. WORK ZONE [ ] Yes [X] No [ ] Unknown

Workers Present [ ] Yes [X] No [ ] Unknown

TRAFFIC CONTROL [X] None [ ] Unknown
Electric: [ ] Green/Yellow/Red [ ] Flashing Red [ ] Flashing Yellow [ ] Ramp Meter [ ] Other (Explain)
Other Controls: [ ] Stop Sign [ ] No Passing Zone [ ] Turn Restricted [ ] Officer / Flagman [ ] Signal On School Bus [ ] Warning Sign / Device [ ] Railway Crossing Sign / Device [ ] School Zone [ ] Yield Sign [ ] Other (Explain)

CONTROL MALFUNCTIONING / INOPERATIVE / MISSING: [ ] Yes (Explain) [X] No [ ] Unknown [ ] NA

7F.

OCCUPANTS - NAME (Last, First, MI) / ADDRESS (Street, City, State, Zip)	DATE OF BIRTH MM-DD-YYYY	SEX	SEAT LOC	INJ	TRANS-PORT	EJEC-TION	AIR BAG	SAFETY DEVICES	PHONE NUMBER

7G. COMMERCIAL MOTOR VEHICLE [X] NA — Required on vehicle if "Yes" was answered to questions in parts 1 and 2 in CMV involvement criteria and vehicle meets one of the three criteria in part 2.

MOTOR CARRIER IDENTIFICATION (Leasee, etc.) - NAME & ADDRESS (Street, City, State, Zip) [ ] SAO — PHONE NUMBER [ ] SAO

COMMERCIAL / NON-COMMERCIAL: [ ] Interstate Carrier [ ] Intrastate Carrier [ ] Not In Commerce - Government Vehicle [ ] Not In Commerce - Rental Vehicle [ ] Not In Commerce - Other Vehicle — MC / MX / ICC NO. — USDOT NO.

CARGO BODY TYPE: [ ] Enclosed Box [ ] Cargo Tank [ ] Flatbed [ ] Dump [ ] Concrete Mixer [ ] Auto Transporter [ ] Garbage / Refuse [ ] Grain / Chip / Gravel [ ] Pole Trailer [ ] Log [ ] Vehicle Towing Another Veh. [ ] Intermodal Container Chassis [ ] NA (No Cargo Body) [ ] Other [ ] Unknown

HAZARDOUS MATERIALS	PLACARD DISPLAYED	4-DIGIT NO.	CLASS	HM CARGO PRESENT	HM CARGO RELEASED	HAZARDOUS MATERIAL NAME
	[ ] Yes [ ] No [ ] Unknown			[ ] Yes [ ] No [ ] Unknown	[ ] Yes [ ] No [ ] Unknown	

8 - CODES

SEAT LOCATION
FR SR TR / FC SC TC / FL SL TL
XX - Not Known
B - Pedalcycle
M - Motorcycle
CP - Commercial Passenger
OE - Occupant - Enclosed Load Area
OU - Occupant - Unenclosed Load Area
RC - Rail Crew
SV - Other (Explain in Narrative)
NA - Not Applicable

INJURY
1. Fatal
2. Disabling
3. Evident - Not Disabling
4. Probable - Not Apparent
5. None Apparent
U. Unknown
N. NA

TRANSPORTED (For Medical Treatment)
1. No
2. EMS
3. Other
U. Unknown
N. NA

EJECTION
1. NA
2. No
3. Partially
4. Totally
U. Unknown

AIR BAG
1. None / NA
3. Not Deployed
4. Removed
5. Deployed - Front
6. Deployed - Side
7. Deployed - Curtain
8. Deployed - Other (Knee, Air Belt, etc.)
9. Deployed - Combination
10. Deployment Unknown
U. Air Bag Presence Unknown

SAFETY DEVICES
1. None
2. Not Used
3. Shoulder Belt Only
4. Lap Belt Only
5. Shoulder and Lap Belt
7. DOT Compliant MC Helmet
8. No Helmet
10. Booster Seat
11. Child Restraint - Forward Facing
12. Child Restraint - Rear Facing
13. Other Helmet
14. Reflective Clothing
15. Other
U. Use Unknown
N. Not Applicable

VEHICLE ACTION / SEQUENCE OF EVENTS (Items with double-asterisk [**] require additional coding)
1. Going Straight
2. Overtaking
3. Making Right Turn
4. Right Turn on Red
5. Making Left Turn
6. Making U-Turn
7. Skidding / Sliding
8. Slowing / Stopping
9. Start In Traffic
10. Start From Parked
11. Backing
12. Stopped In Traffic
13. Parked
14. Changing Lanes
15. Avoiding
16. Cross Median
17. Cross Center Of Road
18. Cross Road
19. Airborne
20. Ran Off Roadway - Right
21. Ran Off Roadway - Left
22. Overturn / Rollover
23. Fire / Explosion
24. Immersion
25. Jackknife
26. Cargo Loss / Shift
27. Equipment Failure
28. Separation Of Units
29. Returned To Roadway
30. Collision Inv. Pedestrian
31. Collision Inv. Bicycle/Pedalcycle
32. Collision Inv. Railway Veh.
33. Collision Inv. Animal (**)
34. Collision Inv. MV in Transport
35. Collision Inv. Parked MV
36. Collision Inv. Fixed Object (**)
37. Collision Inv. Other Object (Explain)
38. Other Non-collision
39. Collision Inv. Bicycle/Pedalcycle In Bicycle Lane
40. Collision Inv. Animal Drawn Vehicle / Animal Ridden For Transportation
41. Collision Inv. Working MV
42. Downhill Runaway
43. Fell/Jumped From MV
44. Thrown/Falling Object
45. Struck By Falling, Shifting Cargo, Object Set In Motion By Own MV
46. Ran Off Roadway - Other (Explain)
47. Cross Separator

ANIMAL CODES FOR VEHICLE ACTION / SEQUENCE OF EVENTS
60. Deer
61. Farm Animal
62. Dog
63. Other Animal
U. Unknown

FIXED OBJECT CODES FOR VEHICLE ACTION / SEQUENCE OF EVENTS
20. Tree / Stump (Standing)
21. Embankment / Driveway / Ground / Rock Bluff
22. Guardrail Face
23. Utility Pole
24. Fence
25. Street Light Support
26. Culvert
27. Highway Traffic Sign Post / Support
28. Bridge Pier / Abutment / Support
29. Curb
30. Mail Box
31. Concrete Traffic Barrier
32. Building
33. Traffic Signal Support
34. Impact Attenuator / Crash Cushion
35. Fire Hydrant
36. Other (Explain)
37. Bridge Parapet End
38. Bridge Rail
39. Guardrail End
40. Other Traffic Barrier
41. Overhead Sign Support
42. Ditch
43. Other Post / Pole / Support
44. Wall
45. Cable Barrier
46. Bridge Overhead Structure
47. Overhead Line / Cable
U. Unknown

DISTRACTED / INATTENTIVE CODES
1. External Distraction
2. Passengers
3. Stereo / Audio / Video Equipment
4. Navigation Device
5. Communication Device - Hand-held
6. Communication Device - Hands Free
7. Communication Device - Texting / E-mailing
8. Communication Device - Web Browsing
9. Eating / Drinking
10. Reading
11. Tobacco Use
12. Grooming
13. Computer Equipment / Electronic Games / etc.
14. Adjusting Vehicle Controls
15. Other (Explain)

VEHICLE TYPE CODES
1. Motor Vehicle In Transport
2. Parked Motor Vehicle
3. Working Motor Vehicle
4. Pedalcycle
5. Animal Drawn Vehicle / Animal Ridden For Transport Purposes
U. Unknown

OTHER VEHICLE CODES
1. Riding Mower / Garden Tractor
2. Golf Cart
3. Snowmobile
4. Forklift
5. Animal Drawn Vehicle / Animal Ridden For Transportation
6. Low Speed Vehicle
7. Other (Explain)

9. NARRATIVE / STATEMENTS (If additional room is necessary, use Section 11 - Narrative / Statements Continuation)

On 06-23-2015 around 1439 hours I responded to the 600 block of Baxter Street in reference to a non injury traffic crash. Central Dispatch Center advised that a vehicle was ran off the roadway by another vehicle.

Upon my arrival I observed a red Chevrolet truck vehicle one (V1) parked on the side of the road, west bound, displaying Missouri registration 5HU954. It was pulling a 16 foot trailer, displaying Missouri registration 41E4KS.

I spoke with the driver of the red truck, Austin Vandorn identified by his Missouri driver's license. Mr. Vandorn said he was traveling west bound on Baxter Street and he swerved off the right side of the roadway into the ditch area to avoid colliding with an oncoming small white car. He explained the car was driving east bound in his traffic lane.

Mr. Vandorn stated the trailer struck a 25 mile per hour speed limit sign with the back passenger side trailer wheels before hitting the culvert. Mr. Vandorn also stated the passenger side mirror of V1 was damaged from the collision. I was able to locate the culvert and speed limit sign that were struck by the vehicle. It was located in front of 622 Baxter Street.

The trailers two right side tires were "blown out" and the fender that covers the wheels and tires were bent. The axle on the trail was also damaged during the collision. The passenger side mirror of V1 was broken, but I was unable to locate what could have caused the damage. The owner of the V1, Melissa Andrews was on scene and requested Ron's Towing to tow the trailer.

I took photographs of the damage to the trailer and V1. I also took photographs of the culvert where V1 left the roadway.

Public works was called and informed about the sign.

Nothing else follows.

10. REPORTING AND REVIEWING OFFICER INFORMATION #121

REPORTING OFFICER NAME	DSN / BADGE NO.	BEAT / ZONE	TROOP / DISTRICT / PRECINCT
OFF WILLIAM CLIFFMAN	121	N	NA

REVIEWING OFFICER NAME	DSN / BADGE NO.	REVIEWING OFFICER 2 NAME	DSN / BADGE NO.